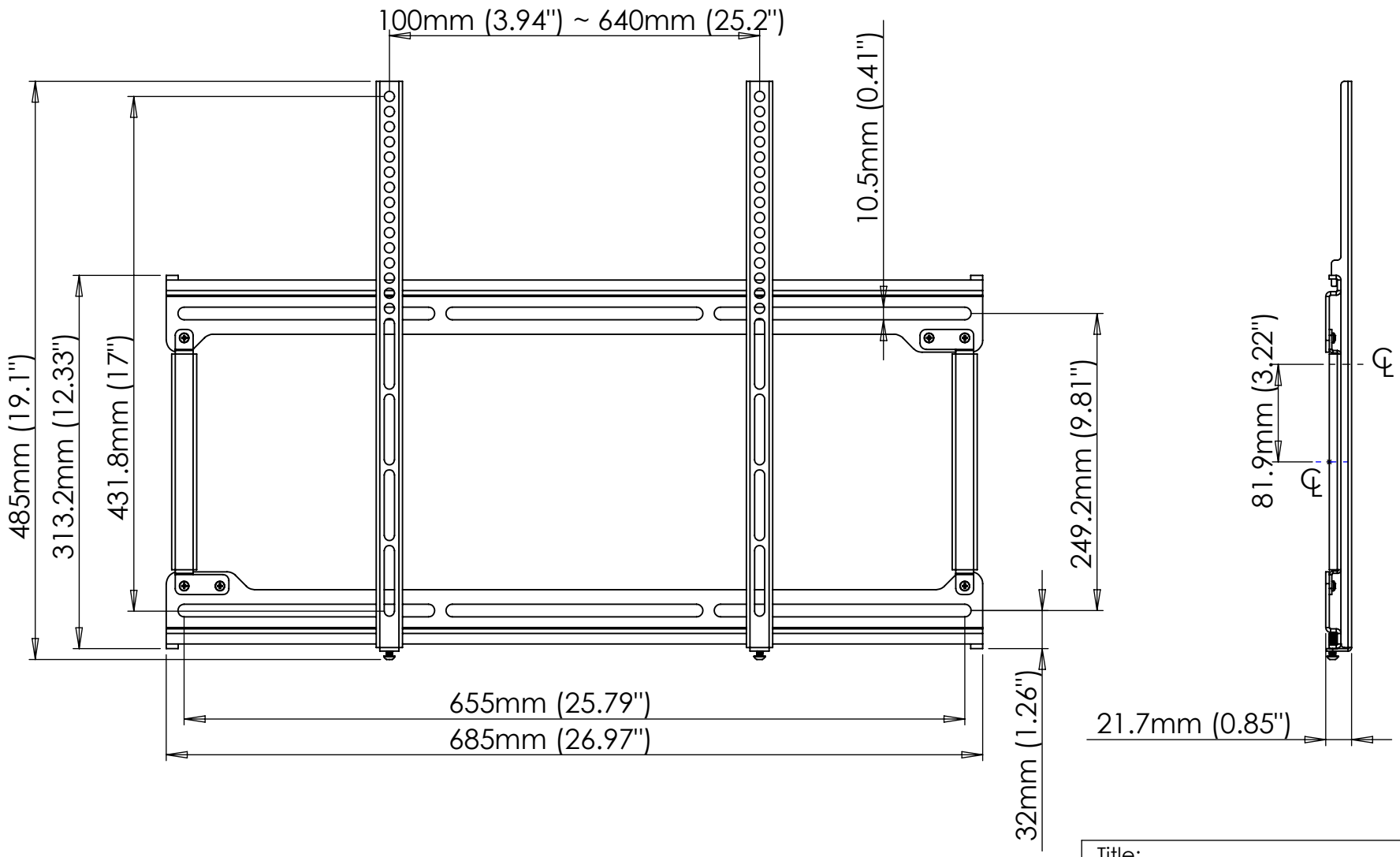

VIDEO MOUNT PRODUCTS

Information and designs contained in this drawing are the proprietary property of Video Mount Products (VMP). None of the design or any information contained in this drawing may be reproduced or disclosed to others without prior written consent of Video Mount Products (VMP).

Title: FP-XMF

SIZE	DWG. NO.	REV
A		

SCALE: 1:5 | Unit: mm | SHEET 1 OF 1

5 4 3 2 1