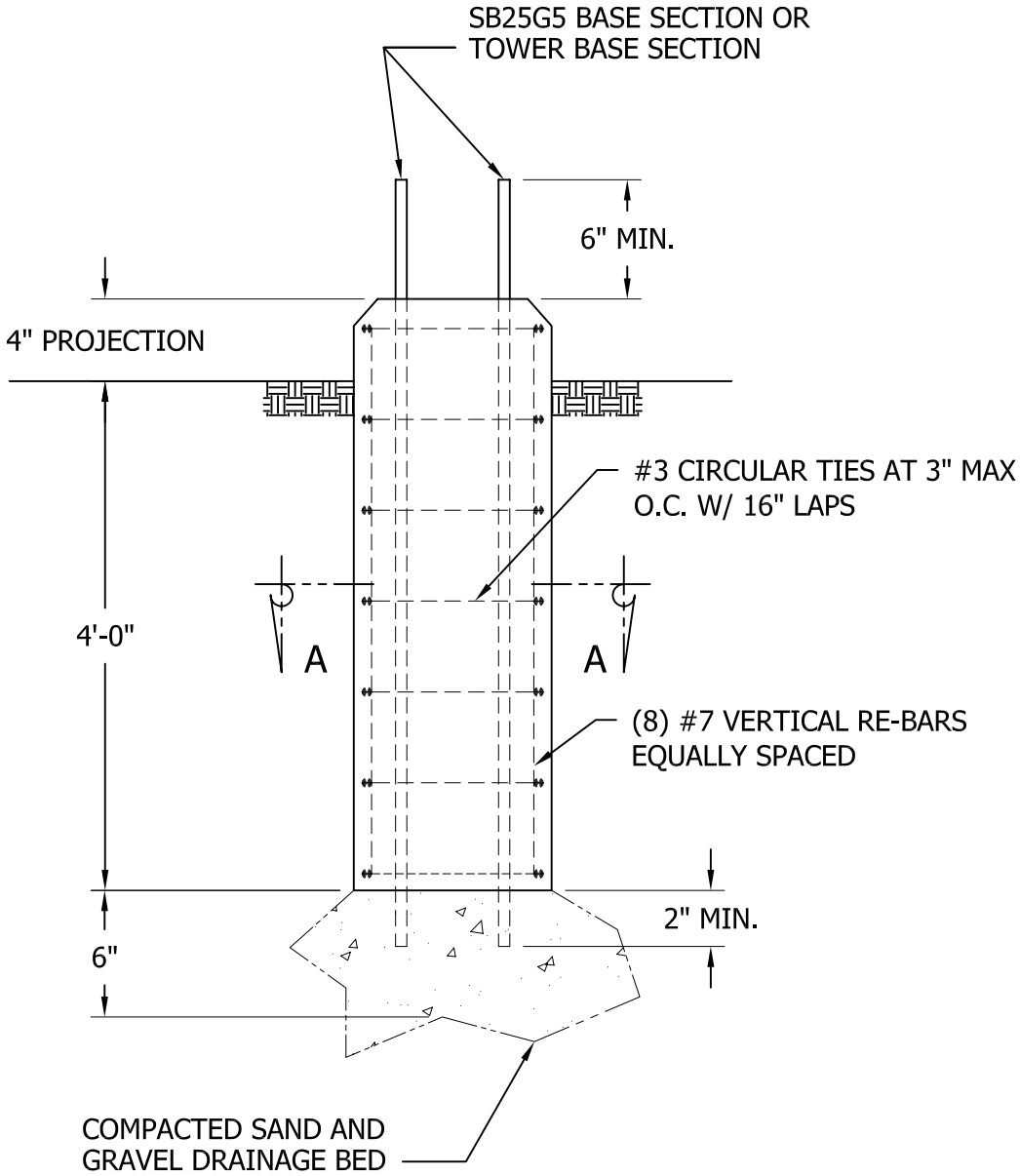


## ELEVATION

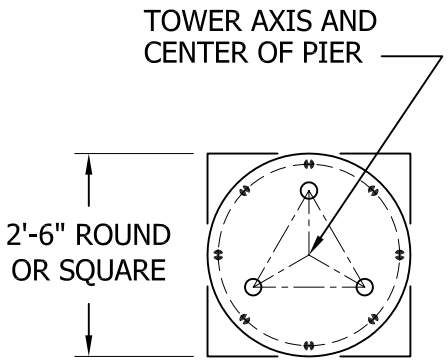


## SECTION A-A

NOTE
FOR REQUIRED MATERIAL SPECIFICATIONS, INSTALLATION NOTES, AND TOLERANCES, SEE DRAWING B841300

## VOLUME OF CONCRETE

SQUARE PIER = 1.0 CU. YDS.
ROUND PIER = 0.8 CU. YDS.

## MAX. REACTIONS

MOMENT = 1,563 FOOT POUNDS
SHEAR = 211 POUNDS
AXIAL = 600 POUNDS

NORMAL SOIL PER ANSI/EIA-222-F

FILE NO.
Standard-25G

REVISIONS

| REV. | DESCRIPTION | DWN | CHK | APP |
|---|---|---|---|---|
| 2 | REDRAWN INTO AUTOCAD FORMAT<br>DATE: Jul/16/2007 | KB2 | JDA | HA |

DWG REFERENCE

ROHN PRODUCTS
6718 WEST PLANK ROAD
PEORIA, IL 61604
TOLL FREE 800-727-ROHN

THIS DRAWING IS THE PROPERTY OF ROHN. IT IS NOT TO BE REPRODUCED, COPIED OR TRACED IN WHOLE OR IN PART WITHOUT OUR WRITTEN CONSENT.

FOUNDATION
FOR BRACKETED 25G TWR DRILLED PIER

| DWN: | CHK'D: | DATE: |
|---|---|---|
| WDU | B_F | Sep/16/1987 |

ENG'R: XK

DRAWING NO: A871298
REV: 2

Jul/19/2007 12:02:20 PM
\Erection\